BASE STAND
FP 1000-S & FP 1500-S

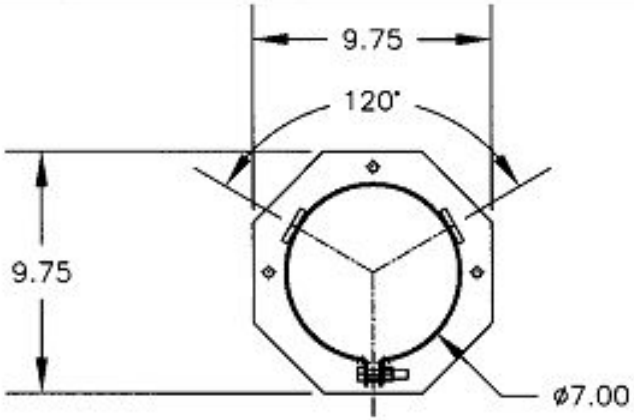

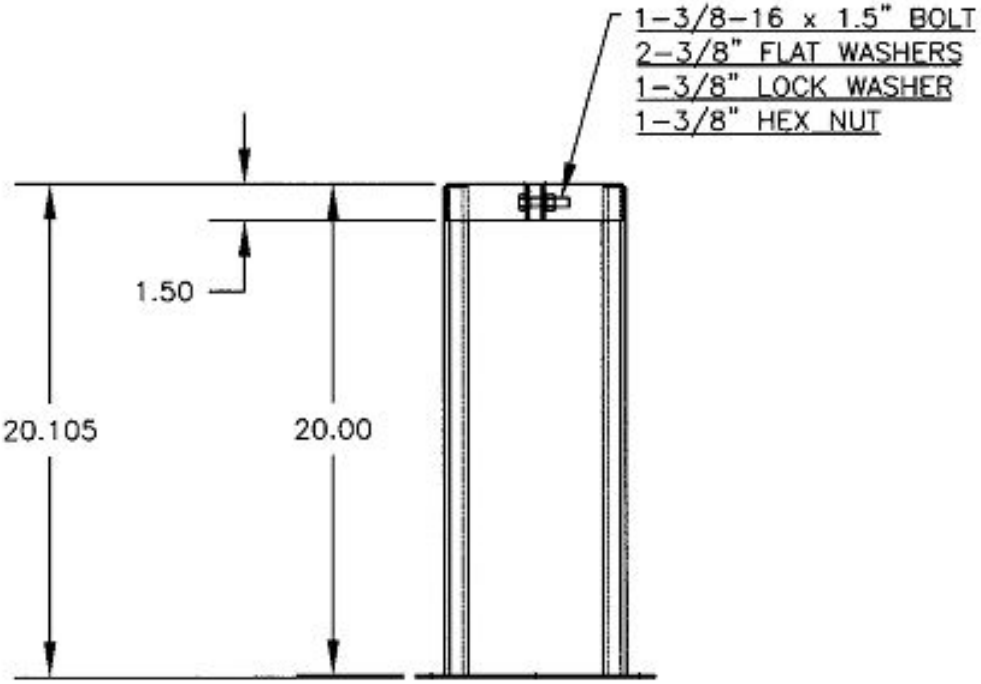

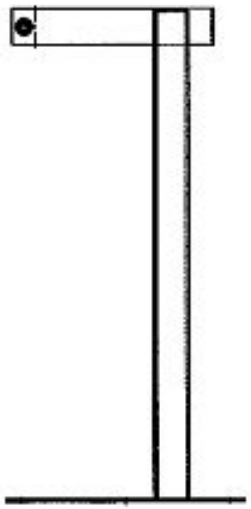

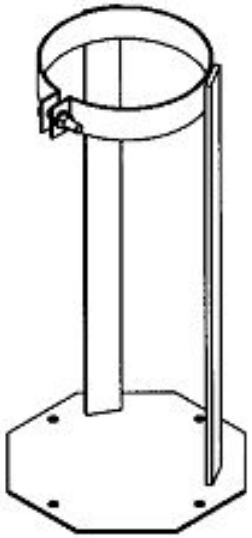

FINISH: Black

NAME	DR.	DATE
BASE STAND FP1000 FP1500	RLT	02 DEC 04
	CK. KJM	SCALE .125"=1"
	MATERIAL REF:	

TRANS. NO.	CHG. LET.	WAS	DATE	BY	APP.	TRANS. NO.	CHG. LET.	WAS	DATE	BY	APP.
						8822		RELEASED	12/02/04	RT	KJM

RCI Technologies, Inc.
San Dimas, CA U.S.A.

SIZE A

PART NO. BASE STAND